IJIRSET
International Journal of Innovative Research in Science | Engineering | Technology

ISSN(O): 2319-8753
ISSN(P): 2347-6710

International Journal of Innovative Research in Science Engineering and Technology (IJIRSET)

(A Monthly, Peer Reviewed, Refereed, Scholarly Indexed, Open Access Journal)

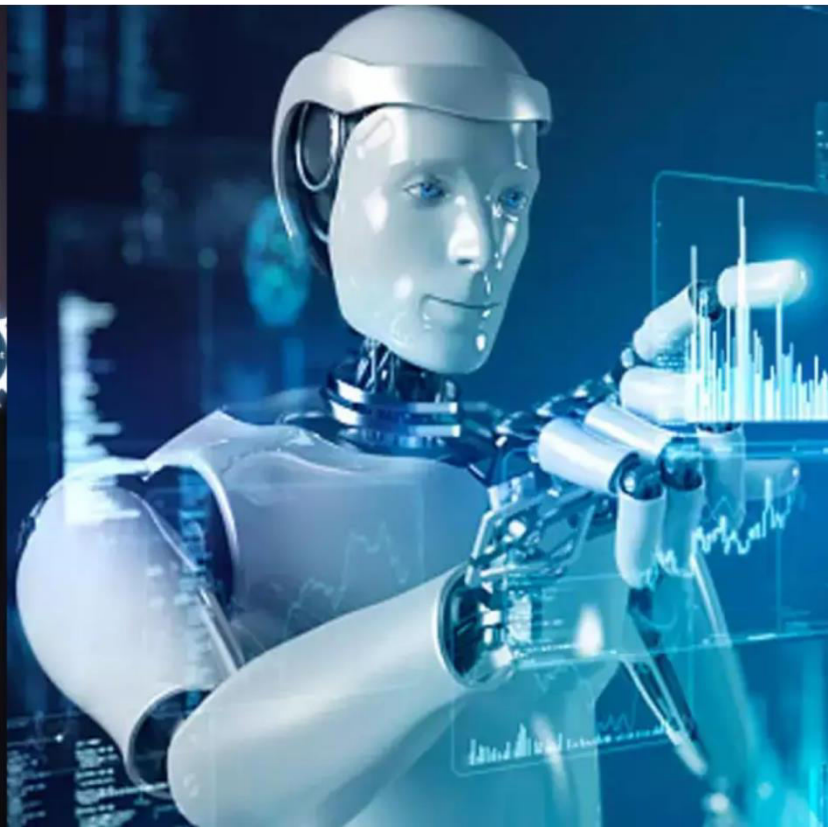

Impact Factor: 9.935

Volume 15, Issue 5, May 2026

International Journal of Innovative Research of Science, Engineering and Technology (IJIRSET)

Impact Factor 9.935

|www.ijirset.com |A Monthly, Peer Reviewed & Refereed Journal| e-ISSN: 2319-8753| p-ISSN: 2347-6710|

Volume 15, Issue 5, May 2026

|DOI: 10.15680/IJIRSET.2026.1505047|

A Review on Millimeter Wave Microstrip Antenna Design Techniques for 5G Applications

Renjitha, S. S. Ajitha, D. Vishnu

Assistant Professor, College of Engineering Chengannur, Kerala, India

Assistant Professor, TKM College of Engineering, Kerala, India

Assistant Professor, TKM College of Engineering, Kerala, India

ABSTRACT: Wireless communication technology has advanced significantly in the last decade. As the data rate requirements are increasing ever since, there is a need to explore data transmission at higher frequency range efficiently to enhance channel capacity. The focus has shifted to millimeter waves to address the accelerating demand for speed in wireless communication. Millimeter waves cover a wide frequency range; thus, the main challenge is to develop a compact antenna technology suitable for small wavelengths using micromachining techniques. This paper provides an overview of different types of antenna arrays with beam steering function in mm-wave communication. It also gives a comprehensive study of antenna designs for gain, bandwidth, and isolation improvements in mm waves.

KEYWORDS: beam steering, mm-wave, micromachining techniques.

I. INTRODUCTION

The mobile service provider market is growing day by day, becoming competitive in the process. Every service provider is trying to integrate features like high quality, low latency, and multimedia applications into devices. The rapid increase in predicted traffic and escalating consumer rate demands have made the industry more competitive. This has led to an interest in powerful radio access technology and more spectrum availability leading to the exploration of mm-wave. Table I shows the different frequency bands under mm wave. Millimeter wave has a smaller wavelength and can exploit many properties such as massive MIMO, polarization, and beamforming [1]. Researchers have shown that 28GHz and 38 GHz can be pre-owned to realize directional steerable antennas at both mobile and base stations. They also exhibit the behavior of mm waves in densely populated regions. Researchers came up with solutions for many issues faced by mm wave, which includes increased link loss and LOS coverage. A key to these issues is adaptive beamforming and varying phase shift [2]. Different types of antennas used in wireless communication are in development since the early1880's. This paper gives an insight of different types of antenna arrays with beam steering capability in mm wave communication and shows the antenna designs for improving gain, bandwidth and isolation in millimetre wave. Also, there is a discussion on reconfigurable antennas and highlights the pros and cons of each of them. The paper is organized into five sections. Types of mm wave antennas are discussed in section II. Section III discusses the future scope of the area and section IV is about the conclusions of the study.

II. TYPES OF MM WAVE ANTENNA

The most used antenna type is the Micro strip patch antenna due to its many superior features like small size, lightweight, robustness when mounted on surfaces, capability to support multiple frequency bands, low fabrication cost due to mass production, etc. Critical factors that are considered in the design of an antenna include characteristics of the patch such as its size and shape, substrate thickness, feed type, layers entrenched, etc. All these factors will affect the performance of an antenna. Antennas used in the edge board have single-polarization and have multiple PCB layers that will eventually alleviate radiation efficiency [3]-[5]. On the other hand, a wide beam antenna can be implemented using Substrate Integrated Waveguide (SIW) technology [6].

International Journal of Innovative Research of Science, Engineering and Technology (IJIRSET)

Impact Factor 9.935

|www.ijirset.com |A Monthly, Peer Reviewed & Refereed Journal| e-ISSN: 2319-8753| p-ISSN: 2347-6710|

Volume 15, Issue 5, May 2026

|DOI: 10.15680/IJIRSET.2026.1505047|

TABLE I UNITS FOR MAGNETIC PROPERTIES

Bands	Frequency Range (GHz)
L	1-2
S	2-4
C	4-8
X	8-12
Ku	12-18
K	18-26.5
Ka	26.5-40
Q	33-50
U	40-60
V	50-75
W	75-110
F	90-140
D	110-170

A. Reconfigurable Antennas

In modern wireless and space applications, the reconfigurable antenna is a necessary component. Here reconfigurable components modify their functions and structure according to requirement. There are different integration techniques and procedures to produce reconfigurable antennas [7]: Electrical switching methods by RF mems, PIN diodes, varactors generalized as electrical method; by photoconductive principle generalized as optical method; by alteration of structure generalized as physical method and by ferrite and liquid change generalized as a material change. Reconfiguration is accomplished by changing frequency, polarization, and radiation characteristics and attained by current redistribution and electromagnetic fields. Reconfigurable antennas can broadly be classified into four types:

- Frequency reconfigurable antennas
- Radiation pattern reconfigurable antennas
- Polarization reconfigurable antennas
- Combination of above three.

These different methods have their pros and cons. RF mems give sound isolation and low loss property but slower response than PIN and varactors. The switches have many biasing lines, affecting radiation patterns and increasing loss, which will be more complex and power consuming. The optical switch has no bias lines, therefore, no interference, but the activation mechanism is complex. The physical method has a slow response. Ferrite-based is of small size due to low relative permittivity but less efficiency. In space applications, mainly RF mems switch, and physical reconfigurable antennas are employed.

B. Antenna Arrays with Beam Steering Capability

Mm wave antenna array system is a solution to obtain high gain to compensate for signal attenuation. Beam steerability can be achieved by varying the amplitude and phase of the elements of an antenna array. Each sub-array has its radiation pattern that shows gain in various directions. The size of the subarray and properties of individual elements influence the gain and bandwidth of an antenna.

1.Phased Array Antennas

The bigger the antennas, the narrower the beam. An example is the big satellite TV which is heavy and difficult to turn in a particular direction. A better option is phased array antennas placed in a rectangular grid or simply just in a line. Each of these sends out the same signal. They constructively and destructively interfere with each other. They all add up together into a narrow beam in one specific direction and cancel out in all other directions. If a slight time delay is given to the signals that are transmitted from each antenna, the direction in which they add together into a narrow beam changes. And this direction depends on how much time delay is added to each signal.

In [8], four low-profile arrays are placed on all sides of a mobile phone that can reach full coverage with a peak gain of

International Journal of Innovative Research of Science, Engineering and Technology (IJIRSET)

Impact Factor 9.935

|www.ijirset.com |A Monthly, Peer Reviewed & Refereed Journal| e-ISSN: 2319-8753| p-ISSN: 2347-6710|

Volume 15, Issue 5, May 2026

|DOI: 10.15680/IJIRSET.2026.1505047|

11dBi as shown in figure 1. Here single element attains 2GHz bandwidth around 28Ghz. The array on each side steer beam within ±45° range in H plane and ±90° in E plane. These beam steering functions help us perceive the good link through which the input signal comes from various angles. The main challenge faced by the directive beam in the mm-wave array is to attain both paths for strong signal and spherical coverage. To subdue this, two design approaches and three sub-array schemes are discussed in [9]. Another pair of designs, one with a scanning range of ±25° and good radiation characteristics using one phase shifter and other by less number of feed ports and phase shifter with scanning range of ±20 as shown in figure 4 is discussed in [10]. An 8 element open elliptical slot PIFA antenna on the device's bottom edge, as shown in figure 5, is designed in [11]. As the slot shape is elliptical, bandwidth is improved.

2. Dipole Array and Slotted Array

A 4-element dipole array for cell phone application with 7.5dBi peak gain and coverage of 90° in elevation and 25° in azimuth, as shown in figure 6, is described in [12]. A comparison of single slot component and 4element slotted array cut on rectangular patch is discussed in [13]. Here a single rectangular patch element of length 19.8mm and width 22mm is placed above an FR4 substrate, and the substrate thickness is 1.6mm. Two slots are cut out vertically from the patch, with 3mm X 16mm dimension. The resonant frequency is 3.4-3.8GHz. Similarly, a four-element array structure is also fabricated, as shown in figure 2, to improve directivity, gain, and efficiency. The size of the 1*4 array is 60mm x 169.07mm x 1.6mm. The microstrip feeding approach is utilized here. Figure 3 displays the variation of return loss of a single element and 1x4 array. Table II shows the performance review of a single element and 1x4 array structure [13]. The beam scanning methods are achieved by changing the width of the waveguide, by using SP2T switcher, and using SP5T switcher. Dipole array with elements that scan using SP5T switcher and not phase shifter is discussed in [14].

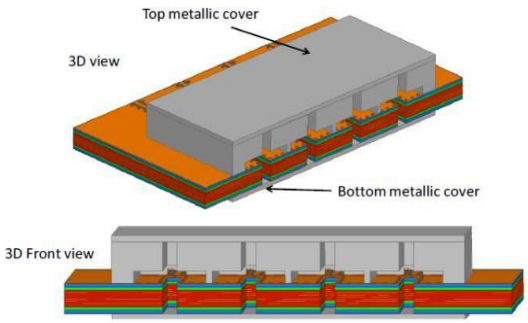

Fig.1.Geometry of a 4-element array

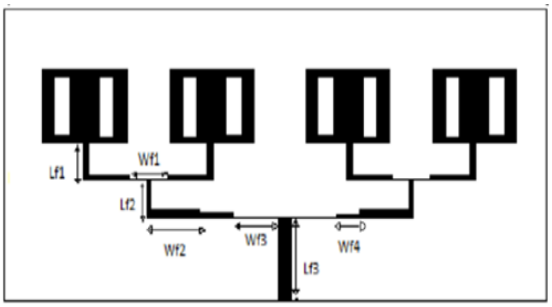

Fig.2.Geometry of 1x4 array structure

TABLE II

PERFORMANCE PARAMETERS OF SINGLE ELEMENT AND 1X4 ARRAY

Characteristics	Single Element	1x4 Array Structure
Patch size (mm)	19.8x22	19.8x22
Gain (dB)	2.90	7.713
Return loss (dB)	-15.6362	-16.8991
Resonating frequency (Ghz)	3.6	3.7
Shape of the radiation pattern at phi = 0 phi = 90	Heart Circular	Heart Mushroom

Figure 7 shows a linear array with a beam steering function with four patches connected by a single transmission line in which two patches are diagonally truncated [15]. Physical dimensions of antennas should remain as a fraction of λgso that RF signals are transmitted and received equally well in all directions. The current distributions on the antenna surface induce several field distributions that will eventually affect characteristic impedance and efficiency. The presence of metallic components nearby deteriorates the radiation properties. Beam steering is also made possible by

International Journal of Innovative Research of Science, Engineering and Technology (IJIRSET)

Impact Factor 9.935

|www.ijirset.com |A Monthly, Peer Reviewed & Refereed Journal| e-ISSN: 2319-8753| p-ISSN: 2347-6710|

Volume 15, Issue 5, May 2026

|DOI: 10.15680/IJIRSET.2026.1505047|

mechanically rotating a fixed pencil beam. In an antenna array, elements should be placed at a distance of λg/2 apart to avoid spatial aliasing, and thus grating lobes are alleviated. The number of elements is inversely related to scanning range. Fan beam is the most common dipole antenna, but fan beams are not applicable due to metallic patterns. An alternative for this is a mesh grid patch antenna [16], as shown in figure 8. An open-ended SIW antenna on the edge of multiple PCB layers is discussed in [17]. It provides 90° and 180° beamwidth in H and E planes, respectively. These will avert degradation of radiation pattern when it is unified with other components. Table III displays the comparative analysis of various antennas in the 5G system.

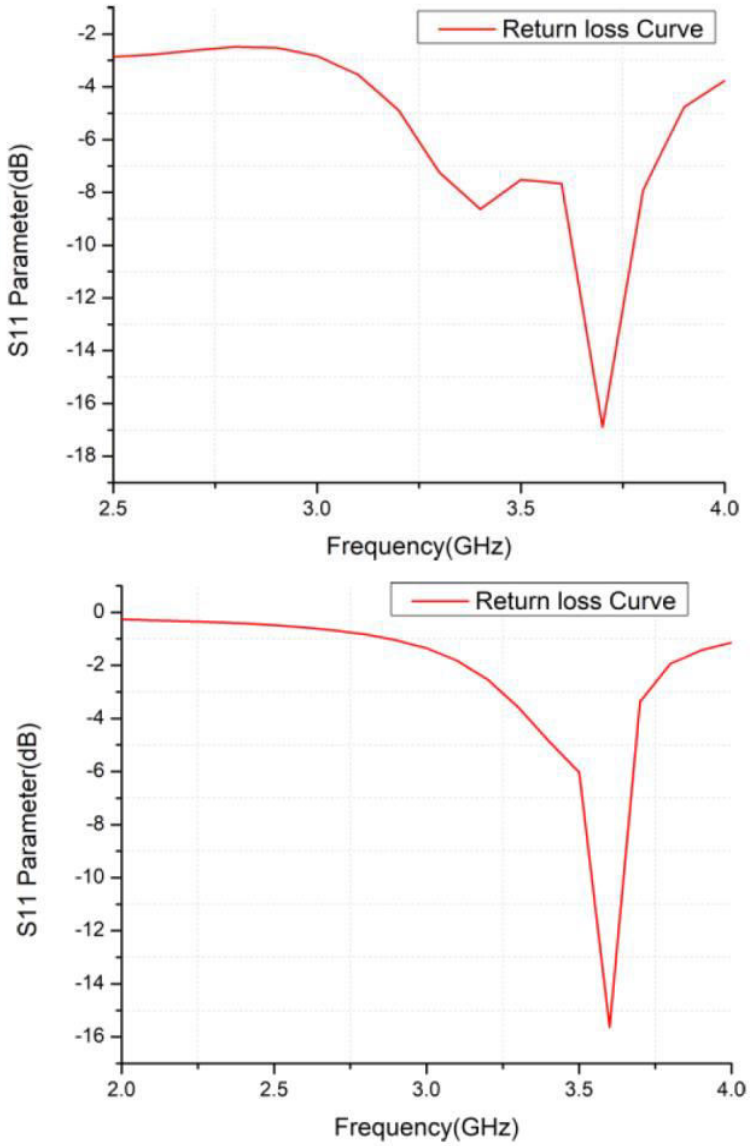

Fig.4. 3*3 array with less number of feed ports

International Journal of Innovative Research of Science, Engineering and Technology (IJIRSET)

Impact Factor 9.935

|www.ijirset.com |A Monthly, Peer Reviewed & Refereed Journal| e-ISSN: 2319-8753| p-ISSN: 2347-6710|

Volume 15, Issue 5, May 2026

|DOI: 10.15680/IJIRSET.2026.1505047|

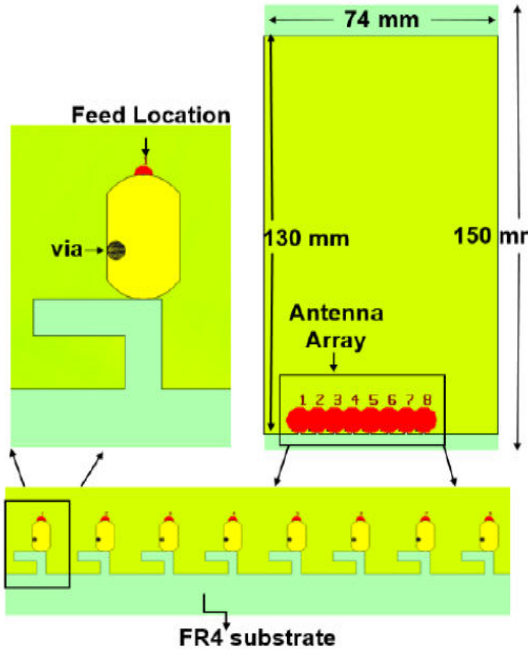

Fig.5. Element open elliptical slot PIFA antenna on mobile's bottom edge

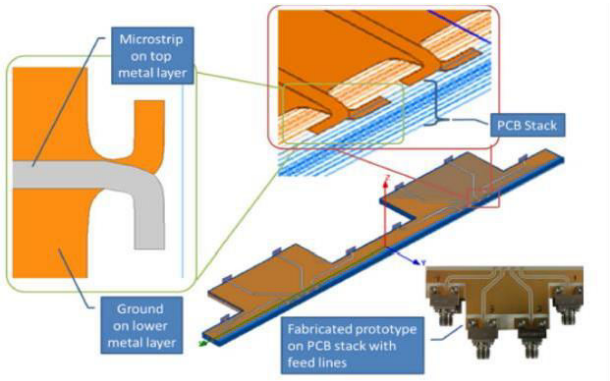

Fig.6.4 element dipole arrays

Different microstrip elements can be excited with various modes to attain wide pattern beamwidth in an antenna array. In [18], two radiating elements are excited by TM10 and TM31 modes. It combines a circular disk, ring, and microstrip technology. Here disk and ring are excited by TM10 and TM31, respectively. It is also compared with canonical dipole (omnidirectional) and single disk patch (directional). A 4-element array can generate a different signal when different ports are excited with the slot coupler. That is, it radiates in +45° slant linear polarization when port 1 is excited, and it shows -45° slant linear polarization when port 2 is excited [19].

.

International Journal of Innovative Research of Science, Engineering and Technology (IJIRSET)

Impact Factor 9.935

|www.ijirset.com |A Monthly, Peer Reviewed & Refereed Journal| e-ISSN: 2319-8753| p-ISSN: 2347-6710|

Volume 15, Issue 5, May 2026

|DOI: 10.15680/IJIRSET.2026.1505047|

TABLE III
RELATIVE ANALYSIS OF ANTENNAS USED IN 5G APPLICATIONS AT MM WAVE

Configurations	FC	Materials Used for Design	εr	Thickness/ Area	Bandwidth	Gain	Return Loss	Radiation Efficiency	Ref.
Radiating structure on circuit board edge mount	30	RO3003	3.0	0.254	6	-	-12	90%	[2]
DD patch array employing EBG ground with dielectric layer superstrate	28	RT5880	2.2	-	-	16	-	92%	[11]
Aperture coupled rectangular patch	15	3-layer PCB	3.0	1.5	3	5.2	-	85%	[12]
Quarter wavelength notch antenna	15	3-layer PCB	7.0	1.5	2	4.4	-	87%	[12]
Phased array with series fed patch antenna (reduced no:.of controllers)	28	Rogers RT/duroid 5880	2.2	0.5	1.96	-	-15	79%	[13]
Dual band slotted patch antenna	28 & 38	RT/duroid 5880	2.2	0.254	-	LHCP gain is 15dB less than RHCP	-40	-	[14]
PIFA with single layer of superstrate	28	Rogers 5870	2.2	0.635	0.98	8.8	<10	97%	[14]
T shaped patch antenna	38	PET	-	16*16	-	8.2	<10	-	[14]
Phased array by open slot PIFA antenna	30	FR4 board	4.2	-	6	13	<10	75%	[15]
Parasitic structure mounted on a circular patch like microphone	18	Roger RT duroid 5880	2.2	-	1.22	18	-20	-	[16]
Wideband multiple microstrip dipole antenna	15	FR4	4.4	0.8	2.2	8.9	-10	82%	[18]
5G microstrip antenna	24.8	RT duroid 5880	2.2	0.787	1.318	-	-19.5	-	[19]
Simple microstrip patch	38 & 54	Rogers RT duroid 5880	2.2	-	1.94 & 2	-	-15.5 & - 12	-	[27]

International Journal of Innovative Research of Science, Engineering and Technology (IJIRSET)

Impact Factor 9.935

|www.ijirset.com |A Monthly, Peer Reviewed & Refereed Journal| e-ISSN: 2319-8753| p-ISSN: 2347-6710|

Volume 15, Issue 5, May 2026

|DOI: 10.15680/IJIRSET.2026.1505047|

Small microstrip patch antenna	10.1	FR4	2.2	-	9.95-10.35	4.46	-18	-	[28]
1*4 microstrip patch slotted array	3.8	FR4	2.2	-	0.84	7.713	-17	-	[20]
SICL based array	1*412	Rogers 5880	2.2	0.875	2.46	12.17	-20	-	[23]

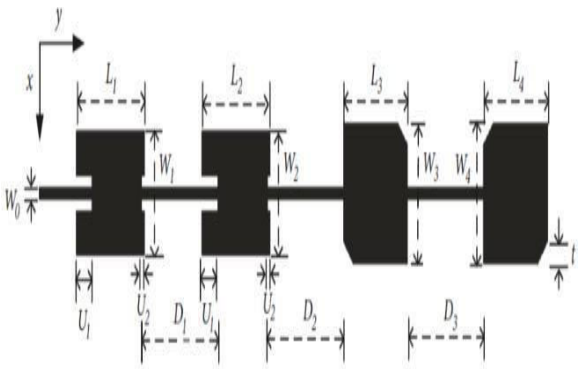

Fig.7.4 patches in which 2 are corner truncated connected by single transmission line

TABLE IV
COMPARISON BETWEEN CONVENTIONAL PATCH ARRAY AND DD ANTENNA ARRAY

Characteristics	Conventional Patch Array	DD Antenna Array
Gain	15.93 dBi	16.3 dBi
Bandwidth	27.1-28.6GHz	27-30GHz
Radiation Efficiency	71.8%	71.8%
Total Efficiency	71.1%	71.4%
SLL (H Plane)	-11.4	-11.6
HPBW (H Plane)	11.1	11
X POL level (H Plane)	49.2	57.5
SLL (E Plane)	-10.3	-10.9
HPBW (E PLANE)	33.9	34
X POL Level (E Plane)	49.1	56.7

International Journal of Innovative Research of Science, Engineering and Technology (IJIRSET)

Impact Factor 9.935

|www.ijirset.com |A Monthly, Peer Reviewed & Refereed Journal| e-ISSN: 2319-8753| p-ISSN: 2347-6710|

Volume 15, Issue 5, May 2026

|DOI: 10.15680/IJIRSET.2026.1505047|

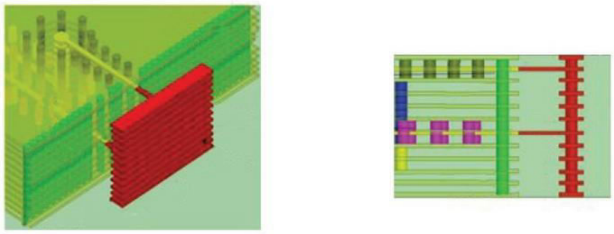

Fig.8. Mesh grid patch antenna

Designs for Gain and Bandwidth Improvement

Gain is an important parameter that shows the performance by amalgamating the directivity of an antenna and its efficiency. It shows how much input power is converted into radio waves by an antenna. Many techniques can achieve gain improvement on an antenna. One of them is superstrate technology that acts as lens focusing. Four circular dense dielectric patch radiator elements with ground based on electromagnetic bandgap unit cell and a dielectric superstrate layer is placed above array antenna as shown in figure 9 for gain enhancement [20]. The comparison between conventional patch antenna and dense dielectric (DD) patch antenna is shown in Table IV. Parasitic design rounded on the circular patch-like microphone shown in figure 10 is discussed in [21]. Three different structures are studied and compared. Among these, a combination of circular patch and microphone patch C structure that is parasitic element has improved performance and elevated gain.

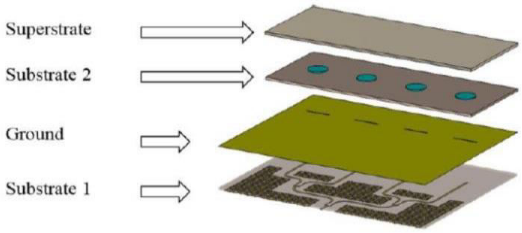

Fig.9. Superstrate technology

Bandwidth is the frequency range over which the antenna properly works. Bandwidth can be improved by truncating corners of patch elements diagonally [22]. The cylindrically truncated corner micro strip antenna faces certain mechanical tension effects as discussed in [23]. Here the patch elongates over the curvature. A 1X4 microstrip antenna array operating at X band is designed in [24]. It consists of Substrate Integrated Coaxial Line (SICL)based T-type power divider and SICL microstrip line adapter based on H type slot coupling. This antenna provides wide bandwidth and high gain. SICL based sections are shielded and non-dispersive TEM guiding structures; therefore, it is suitable for circuits in millimeter frequency ranges. SICL is a coaxial line structure with high isolation quality. SICL's size is compact, and recently, it is used in many microwave components. A ground plate employed in slot coupling method isolate the radiation element from the feed to alleviate any spurious radiation from the feed.

International Journal of Innovative Research of Science, Engineering and Technology (IJIRSET)

Impact Factor 9.935

|www.ijirset.com |A Monthly, Peer Reviewed & Refereed Journal| e-ISSN: 2319-8753| p-ISSN: 2347-6710|

Volume 15, Issue 5, May 2026

|DOI: 10.15680/IJIRSET.2026.1505047|

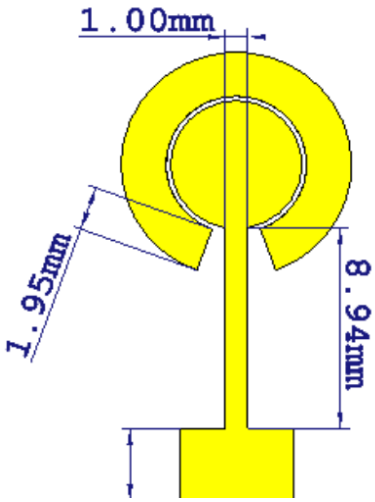

Design for Isolation Improvement

The distance between the 2 elements should be at least λ/2 to avoid interference. Filtering structures can be implemented to alleviate mutual coupling. The usage of resonators and transmission notch in the patch antenna improves isolation [25]. Here, when the high band element is excited, electromagnetic radiation by the low band is absorbed by filtering structure and vice versa and thus improving isolation. In [26], a decoupling structure which is a combination of modified array antenna decoupling structure (MADS) and H-shaped defect ground structures (HDGS) is used. MADS creates reflected waves with equal magnitude but out of phase with coupling waves. HDGS produces a current opposing the coupling current, thus reducing mutual coupling. There are many techniques to improve isolation between antenna elements such as polarisation converter between elements [27], U shaped parasitic element [28], defect ground structure (DGS) [29]-[30], antenna decoupling surface [31]-[32], the planar spiral structure between antenna elements [33]. The direct coupling caused by surface waves and space waves between elements can be avoided by introducing indirect coupling with controlled magnitude and phase with the help of two couplers. A simple microstrip array of two elements is presented in [34] to better understand decoupling performance. Mutual coupling causes the input port impedance in a phase array to vary according to the scan angles. It also reduces SNR and channel capacity in MIMO, so a decoupling mechanism can also be introduced in MIMO and phased arrays. Mutual coupling can be reduced if feeding lines are interconnected through lumped capacitors. Details about the coupling mechanism and how a 2-element array with and without a decoupling network affect mutual coupling and radiation performance are explained in [34].

III. FUTURE SCOPE: TERAHERTZ WAVE COMMUNICATION

The origin of THz waves has begun in 2000. The frequency range of THz waves is 0.1-10THz (wavelength of 0.03-3mm). THz can attain Gbps data rate, but the THz range is still underdeveloped. The perceptible trend in THz communication is an increase in frequency up to 700GHz. The main challenge faced by the researchers is in the development of antenna technology for this large frequency range. A120GHz link is set up employing a planar dipole and ring slot antenna combined with a photodiode and Schottky barrier diode for transmitter [35]-[37] and receiver [38]. There are a variety of antennas in the THZ range including: horn antennas, photoconductive antennas, microstrip antennas, lens antennas, and on-chip antennas. THz horn antennas working at 0.84THz and 1.7THz give good beam performance. A waveguide slot antenna array for 120-300 GHz bands has been designed to attain high gain with a small size [39]. Researchers mainly focus on ameliorating gain by employing dielectric lens antennas whose performance can be enhanced using specific optimization algorithms. There are several types of THz antennas, but they can be grouped as metallic, dielectric, and new material antennas [40]. Metallic antenna mainly incorporates horn antenna. With increase in frequency (THz), the dimension of the horn becomes smaller, thus making it difficult to manufacture the tip end; therefore, the processing cost increases. The solution is the use of a simple conical or tapered horn.

International Journal of Innovative Research of Science, Engineering and Technology (IJIRSET)

Impact Factor 9.935

|www.ijirset.com |A Monthly, Peer Reviewed & Refereed Journal| e-ISSN: 2319-8753| p-ISSN: 2347-6710|

Volume 15, Issue 5, May 2026

|DOI: 10.15680/IJIRSET.2026.1505047|

Dielectric antenna integrates dielectric substrate and antenna radiator. It may cause energy loss due to surface wave effect. They are present in different geometries: U-shaped, butterfly-shaped, logarithmic periodic sinusoidal shaped, etc. An example of the new material antenna is dipole made of carbon nanotubes as an alternative to metals. It can attain multiple resonance points within a specific frequency range. Grapheme planar antennas also offer better bandwidth.

IV. CONCLUSION

In the 20th century, G. Marconi pioneered long-distance radio transmission. Now the researchers are exploring higher and higher frequency ranges to strengthen the channel capacity. It is expected that in 10 years, the data rate will elevate to 100 Gb/s. In the near future, it is likely to reach 1Tb/s. An advanced antenna system (AAS) with beamforming and MIMO or spatial multiplexing functions is utilized to achieve this and enhance the end-user experience. AAS will enrich the network performance in uplink and downlink communication. This paper shows different antenna arrays with beam steering capability, antenna designs to enhance bandwidth and gain, and techniques to improve isolation and reduce mutual coupling in mm-wave systems. It is evident that high gain beams are attained by integrating signals from several antenna elements. Superstrate technology provides better gain, and bandwidth can be enhanced by truncating corners of antenna elements. There are many ways to avoid mutual coupling and enhance isolation. The distance between the antenna elements should be maintained at least $\lambda/2$. By exploiting these techniques, we can significantly enhance the radiation performance of an antenna.

REFERENCES

[1] T. S. Rappaport, S. Sun, R. Mayzus, H. Zhao, Y. Azar, K. Wang, G. N. Wong, J. K. Schulz, M. Samimi, and F. Gutierrez, "Millimeter wave mobile communications for 5G cellular: It will work!" IEEE Access, vol. 1, pp. 335–349, 2013.doi: 10.1109/ACCESS.2013.2260813

[2] Z. Ahmad and J. Hesselbarth, "Circuit-board edge-mount dual-polarized millimeter-wave antenna," 2017 IEEE International Symposium on Antennas and Propagation & USNC/URSI National Radio Science Meeting, San Diego, CA, USA, 2017, pp. 1443-1444, doi: 10.1109/APUSNCURSINRSM.2017.8072764.

[3] W. Hong, S. T. Ko, Y. Lee and K. H. Baek, "Compact 28 GHz antenna array with full polarization flexibility under yaw, pitch, roll motions,"Proc. 9th Europ.Conf.Antennas Prop.(EuCAP), Lisbon,2015. https://ieeexplore.ieee.org/document/7228571

[4] W. Hong, K. Baek, Y. G. Kim, Y. Lee and B. Kim,"mm Wave phased array with hemispheric coverage for 5th generation cellular handsets,"Proc. 8th Europ.Conf. Antennas Prop.(EuCAP), pp. 714-716, The Hague, 2014.doi: 10.1109/EuCAP.2014.6901859

[5] W. Hong, K. Baek, Y. Lee and Y. G. Kim, "Design and analysis of a low-profile 28 GHz beam steering antenna solution for Future 5G cellular applications," IEEE MTT-S Int. Microw. Symp.(IMS), Tampa, FL, 2014.doi: 10.1109/MWSYM.2014.6848377

[6] D. Psychoudakis, H. Zhou, B. Biglarbegian, T. Henige and F. Aryanfar, "Mobile station radio frequency unit for 5G communications at 28GHz,"IEEE MTT-S Int. Microw.Symp.(IMS), San Francisco, CA, 2016.doi: 10.1109/MWSYM.2016.7540312

[7] C. G. Christodoulou, Y. Tawk, S. A. Lane and S. R. Erwin, "Reconfigurable Antennas for Wireless and Space Applications," in Proceedings of the IEEE, vol. 100, no. 7, 2250-2261, July 2012, doi: 10.1109/JPROC.2012.2188249.

[8] H. Zhou, "Phased array for millimeter-wave mobile handset," pp. 933–934, July 2014.doi: 10.1109/APS.2014.6904795

[9] J. Helander, K. Zhao, Z. Ying, and D. Sjberg, "Performance analysis of millimeter-wave phased array antennas in cellular handsets," IEEE Antennas and Wireless Propagation Letters, vol. 15,pp.504–507,2016.doi: 10.1109/LAWP.2015.2455040

[10] M. Khalily, R. Tafazolli, T. A. Rahman, and M. R. Kamarudin, "Design of phased arrays of series-fed patch antennas with reduced number of the controllers for 28 GHz mm-wave applications," IEEE Antennas and Wireless Propagation Letters, vol. 15, pp. 1305–1308, 2016.doi: 10.1109/LAWP.2015.2505781

[11] M. Stanley, Y. Huang, T. Loh, Q. Xu, H. Wang and H. Zhou, "A high gain steerable millimeter-wave antenna array for 5G smartphone applications," 2017 11th European Conference on Antennas and Propagation (EUCAP), Paris, France, 2017, pp. 1311-1314.doi: 10.23919/EuCAP.2017.7928542

[12] D. Psychoudakis, Z. Wang and F. Aryanfar, "Dipole array for mm-wave mobile applications," 2013 IEEE Antennas

and Propagation Society International Symposium (APSURSI), Orlando, FL, USA, 2013, pp. 660-661, doi: 10.1109/APS.2013.6710990

[13] P. S. Naik and H. G. Virani, "1×4 Microstrip Patch Slotted Array Antenna for 5G C-Band Access Point Application," 2020 International Conference on Electronics and Sustainable Communication Systems (ICESC), Coimbatore, India, 2020, pp. 641-644, doi: 10.1109/ICESC48915.2020.9156015.

[14] D. Oueslati, A. Ghalib, R. K. Arya, H. Rmilli and R. Mittra, "Microstrip-fed Scanned Dipole Antenna Array for 5G Applictions," 2019 IEEE International Symposium on Antennas and Propagation and USNC-URSI Radio Science Meeting, Atlanta, GA, USA, 2019, pp. 37-38, doi: 10.1109/APUSNCURSINRSM.2019.8888720.

[15] Hung -Chen Chen, Tsenchieh Chiu, Ching-Luh Hsu, "Design of Series-Fed Bandwidth-Enhanced Microstrip Antenna Array for Millimetre-Wave Beamforming Applications", International Journal of Antennas and Propagation, vol. 2019, Article ID 3857964, 10 pages, 2019. https://doi.org/10.1155/2019/3857964

[16] W. Hong, K. H. Baek, Y. Lee, Y. Kim, and S. T. Ko, "Study and prototyping of practically large-scale mmwave antenna systems for 5G cellular devices," IEEE Communications Magazine, vol. 52, no. 9, pp. 63–69, September 2014.doi: 10.1109/MCOM.2014.6894454

[17] H. Zhou and F. Aryanfar, "Millimeter-wave open ended siw antenna with wide beam coverage," pp. 658–659, July 2013.doi: 10.1109/APS.2013.6710989

[18] I. V. Trivino and A. K. Skrivervik, "Broadbeammicrostrip patch antenna using higher order modes," 2019 13th European Conference on Antennas and Propagation (EuCAP), Krakow, Poland, 2019, pp. 1-4. https://ieeexplore.ieee.org/document/8739952.

[19] Z. Zhou, Z. Wei, Z. Tang and Y. Yin, "Design and Analysis of a Wideband Multiple-Microstrip Dipole Antenna with High Isolation," in IEEE Antennas and Wireless Propagation Letters, vol. 18, no. 4, pp. 722-726, April 2019, doi: 10.1109/LAWP.2019.2901838.

[20] O. M. Haraz, A. Elboushi, S. A. Alshebeili, and A. R. Sebak, "Dense dielectric patch array antenna with improved radiation characteristics using ebg ground structure and dielectric superstrate for future 5G cellular networks," IEEE Access, vol. 2, pp. 909–913, 2014.doi: 10.1109/ACCESS.2014.2352679

[21] H. Yon, M.T. Ali, M.A. Aris, B.Baharom, and N.M. Nasir, N.. (2018). A New Model Microstrip Antenna like Microphone Structure for 5G Application.17-20. 10.1109/RFM.2018.8846496.

[22] Hung-Chen Chen, Tsenchieh Chiu, Ching-Luh Hsu, "Design of Series-Fed Bandwidth-Enhanced Microstrip Antenna Array for Millimetre-Wave Beamforming Applications", International Journal of Antennas and Propagation, vol. 2019, Article ID 3857964, 10 pages, 2019. https://doi.org/10.1155/2019/3857964

[23] D. F. Moná, E. S. Sakomura, D. C. Nascimento and D. B. Ferreira, "Mechanical Tension Effects on Cylindrical Truncated-Corner Microstrip Antennas," 2019 IEEE International Symposium on Antennas and Propagation and USNC-URSI Radio ScienceMeeting, Atlanta, GA, USA, 2019,pp. 1929-1930,doi:10.1109/APUSNCURSINRSM.2019.8888522.

[24] J. Sun, X. H. Hu, L. Xu and F. Wei, "1X4 Microstrip Antenna Array Based on SICL Transmission Line Technology," 2020 9th Asia-Pacific Conference on Antennas and Propagation (APCAP), Xiamen, China, 2020, pp. 1-2, doi: 10.1109/APCAP50217.2020.9246034.

[25] J. Guo, F. Liu, L. Zhao, G. Huang, Y. Li and Y. Yin, "Isolation Improvement of Two Tightly Coupled Antennas Operating in Adjacent Frequency Bands Using Filtering Structures," in IEEE Open Journal of Antennas and Propagation, vol. 1, pp. 207-214, 2020, doi: 10.1109/OJAP.2020.2996902.

[26] Z. Niu, H. Zhang, Q. Chen and T. Zhong, "Isolation Enhancement in Closely Coupled Dual-Band MIMO Patch Antennas," in IEEE Antennas and Wireless Propagation Letters, vol. 18, no. 8, pp. 1686-1690, Aug. 2019, doi: 10.1109/LAWP.2019.2928230.

[27] Y. F. Cheng, X. Ding, W. Shao, and B. Z. Wang, "Reduction of mutual coupling between patch antennas using a polarization-conversion isolator,"IEEE Antennas Wireless Propag. Lett., vol. 16, pp. 1257–1260, 2017.doi: 10.1109/LAWP.2016.2631621

[28] S. Farsi et al., "Mutual coupling reduction between planar antennas by using a simple microstrip U-section,"IEEE Antennas Wireless Propag.Lett., vol. 11, pp. 1501–1503, 2012.doi: 10.1109/LAWP.2012.2232274

[29] K. Wei, J. Y. Li, L. Wang, Z. J. Xing, and R. Xu, "S-shaped periodic defected ground structures to reduce microstrip antenna array mutual coupling,"Electron. Lett., vol. 52, no. 15, pp. 1288–1290, 2016.doi: 10.1049/el.2016.0667

[30] M. S. Sharawiet al., "A dual-element dual-band MIMO antenna system with enhanced isolation for mobile terminals,"IEEE Antennas WirelessPropag.Lett., vol. 11, pp. 1006–1009, 2012.doi: 10.1109/LAWP.2012.2214433

[31] K. L. Wu, N. Chang, W. X. Mei, and Z. Y. Zhang, "Array-antenna decoupling surface,"IEEE Trans. Antennas Propag., vol. 65, no. 12, pp. 6728–6738, Dec. 2017.doi: 10.1109/TAP.2017.2712818

Volume 15, Issue 5, May 2026

|DOI: 10.15680/IJIRSET.2026.1505047|

[32] Z. C. Niu, H. Zhang, Q. Chen, and T. Zhong, "Isolation enhancement using a novel array-antenna decoupling surface for microstrip antennas,"Prog.Electromagn.Res. M, vol. 72, 49–59, 2018.doi: 10.2528/PIERM18070502.

[33] J. H. Xunet al., "Compact dual-band decoupling structure for improving mutual coupling of closely placed PIFAs,"IEEE Antennas WirelessPropag. Lett., vol. 16, pp. 1985–1989, 2017.doi: 10.1109/LAWP.2017.2691716

[34] R. Xia, S. Qu, P. Li, Q. Jiang and Z. Nie, "An Efficient Decoupling Feeding Network for Microstrip Antenna Array," in IEEE Antennas and Wireless Propagation Letters, vol. 14, pp. 871-874, 2015, doi: 10.1109/LAWP.2014.2380786.

[35] T. Nagatsuma, A. Hirata, Y. Royter, M. Shinagawa, T. Furuta, T. Ishibashi, and H. Ito, "A 120-GHz Integrated Photonic Transmitter," Tech. Dig. IEEE Intern. Topical Meeting on Microwave Photonics (MWP2000), pp. 225–228, Sept.2000.doi: 10.1109/MWP.2000.889829

[36] T. Nagatsuma, G. Ducournau, and C. C. Renaud, "Advances in terahertz communications accelerated by photonics," Nature Photonics, vol. 10, pp. 371–379, 2016.doi: 10.23919/PS.2019.8818026.

[37] A. Hirata, H. Ishii, and T. Nagatsuma, "Design and characterization of millimeter-wave antenna for integrated photonic transmitter," IEEE Trans. Microwave Theory Tech., vol. 49, pp. 2157–2162, Dec. 2001.doi: 10.1109/APMC.2000.925722

[38] T. Minotani, A. Hirata, and T. Nagatsuma, "A Broadband 120-GHz Schottky-diode receiver for 10-Gbit/s wireless links," Proc. Asia Pacific Microwave Conference (APMC2002),2002.https://www.researchgate.net/publicatio n/290160304_A_broadband_120-GHz_Schottky-diode_receiver_for_10-Gbits_wireless_links

[39] J. Hirokawa, D. Kim, K. Sakurai, M. Ando, T. Takada, and T. Nagatsuma, "Designs and measurements of plate-laminated waveguide slot array antennas for 120GHz band and 350GHz band," in Proc. Asia--Pacific Microw. Conf., pp. 445--448, Dec. 2011. https://ieeexplore.ieee.org/document/6173782

[40] Y. He, Y. Chen, L. Zhang, S. Wong and Z. N. Chen, "An overview of terahertz antennas," in China Communications, vol. 17, no. 7, pp. 124-165, July 2020, doi: 10.23919/J.CC.2020.07.011.

INTERNATIONAL STANDARD SERIAL NUMBER INDIA

INNO SPACE
SJIF Scientific Journal Impact Factor

doi cross ref

निस्केयर
NISCAIR

INTERNATIONAL JOURNAL OF INNOVATIVE RESEARCH

IN SCIENCE | ENGINEERING | TECHNOLOGY

9940 572 462 6381 907 438 ijirset@gmail.com

www.ijirset.com

Scan to save the contact details